COLOR BLOCK 2

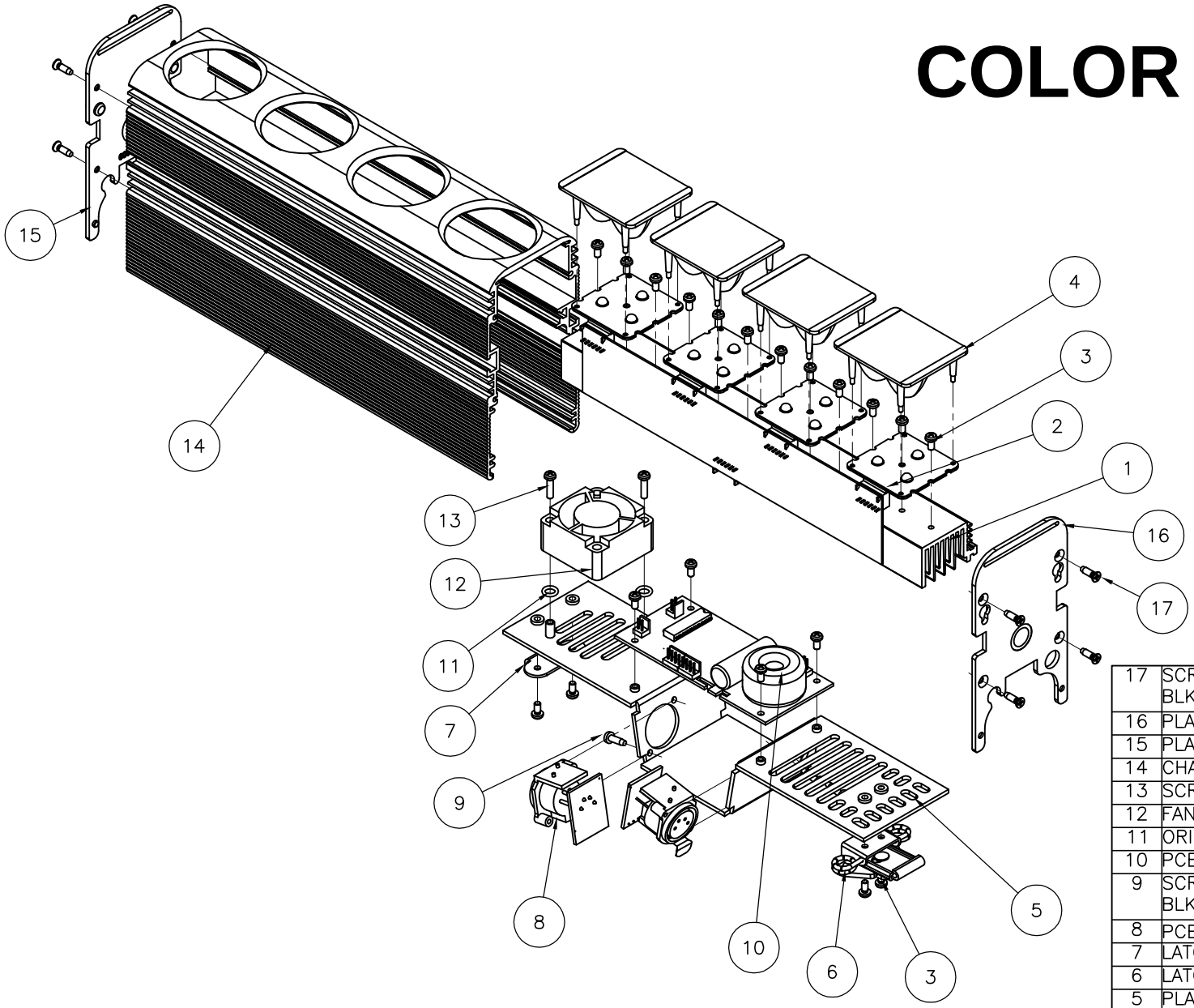

ITEM	DESCRIPTION	PART#	QTY
17	SCREW SELF TAP FH PZDV BLK ST2.9x13 RoHS	900–0080	8
16	PLATE END HOLE CB2	603–0017	1
15	PLATE END RIVET CB2	603–0016	1
14	CHANNEL 4U MACHINED	603–0013	1
13	SCREW M3x12 PH PLPS Blk	900–0040	2
12	FAN ASSEMBLY 602	100–0028	1
11	ORING 5mm RUBBER Blk	900–0601	2
10	PCB COMPLETE PSU CBII	603–0005	1
9	SCREW M3x10 PH PLPS BLK Plastite	900–0024	4
8	PCB COMPLETE XLR IN/OUT	602–0100	1
7	LATCH CATCH BLACK	900–1157	1
6	LATCH SMALL BLACK	900–1156	1
5	PLATE BOTTOM CB2	603–0015	1
4	S/A LENS MODULE CB II	603–0022	4
3	SCREW M3x6 PH PLPS Blk	900–0017	20
2	KIT LIGHT ENGINE REPLACEMENT	603–0200	1
1	HEATSINK CB2 BLACK	603–0014	1

Parts List